A Rotatable Reconfigurable Antenna for Cognitive Radio Applications

Y. Tawk[1], J. Costantine[2], and C. G. Christodoulou[1]

[1]Electrical and Computer Engineering, University of New Mexico, Albuquerque, NM 87131, USA
[2]Electrical Engineering Department, California State University Fullerton, Fullerton, CA 92831, USA

***Abstract* — This paper presents an antenna scheme suitable for cognitive radio applications. A UWB sensing antenna and a frequency reconfigurable communicating antenna are incorporated together into the same antenna substrate. The UWB antenna searches for available spectrum holes while the reconfigurable antenna simultaneously tunes its operating frequency to the corresponding frequency determined by the sensing antenna. A new technique to achieve the required frequency reconfigurability is implemented via a rotational motion of a series of antenna patches. This eliminates the use of any bias lines as with the case of RF MEMs, PIN diodes and lumped elements. A prototype antenna was fabricated to test the proposed method. In the fabricated prototype, a stepper motor is incorporated and controlled via a computer. The use of this antenna structure in a cognitive radio communication link is demonstrated.**

***Index Terms* — Reconfigurable antenna, sensing antenna, UWB, rotational motion.**

I. Introduction

In November 2002, the Federal Communications Commission (FCC) noted that the current overall spectrum is highly underutilized, where it is found that 70% of the allocated licensed spectrum remains unused [1]. The Cognitive Radio (CR), built on a Software Defined Radio (SDR) platform, aims to improve the spectral utilization by dynamically interacting with the RF environment. In a cognitive radio environment, the spectrum bands are assumed to be owned by primary users and whenever these bands are not fully utilized, secondary users can share them as long as the channel Quality of Service (QoS) is not compromised.

The basic RF architecture of a CR system comprises of a "sensing antenna" to continuously monitor the wireless channel and search for unused frequency bands and a "reconfigurable transmit/receive antenna" to perform the required communication within those unused frequency channels [2]. One possible implementation of a CR system is shown in Fig. 1. In such a system, we should have a sensing antenna that continuously scans the communication channel searching for spectrum holes. Two modules, the "Spectrum Sensing" and the "Spectrum Decision", are required to determine the unused frequency bands and assign the appropriate frequency to the secondary users. Based on the output of the "Spectrum Decision" module, the "Switch Controller" will communicate with the switch activation circuit in order to change the physical/electrical structure of the reconfigurable antenna. The reconfigurable antenna should tune its operating frequency to the one determined by the "Spectrum Decision" module.

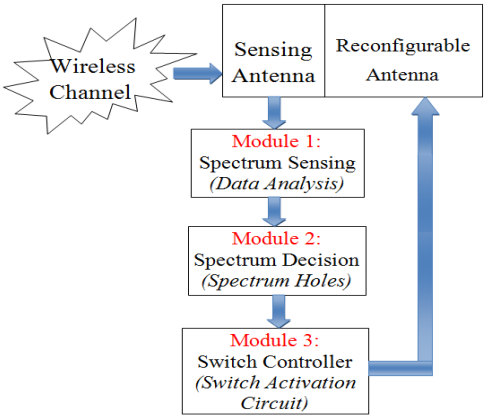

Fig. 1. A Cognitive radio system

Recently various designs and architectures for cognitive antennas have emerged. In [3], a quad-antenna with a directional radiation pattern is presented. The operating frequency can be adjusted using MEMS switches making it suitable for cognitive radio applications. A reconfigurable C-slot microstrip patch antenna is proposed in [4]. Reconfigurability is achieved by switching on and off two patches using PIN diodes. The antenna can operate in dual-band or in a very wide band mode.

In this paper a new reconfigurable antenna design is presented. The antenna structure incorporates both a sensing and a reconfigurable antenna module into the same substrate. The sensing antenna covers the band from 2GHz till 10 GHz, while the reconfigurable antenna is able to tune its operating frequency through the entire band covered by the sensing antenna. Reconfigurability is obtained by feeding at different instances, different antenna patches. This reconfiguration is achieved by a rotational motion. A detailed explanation of the antenna structure is discussed in section II. The measurement data and the control mechanism of the rotation via a stepper motor are shown in Section III. The implementation of the proposed structure as a cognitive radio receive channel are shown in Section IV. Finally, we conclude in Section V by

summarizing the presented results and proposing future work.

II. Antenna Structure

The antenna is printed on a 70mm x 50mm Rogers Duroid 5880 substrate with a dielectric constant of 2.2 and a height of 1.6 mm. The corresponding antenna structure is shown in Fig.2. The left module is the sensing antenna while the right part is the reconfigurable section.

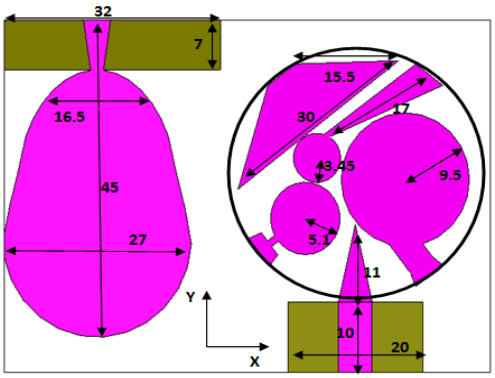

Fig. 2. The antenna structure (dimensions in mm)

A. Sensing Antenna

The sensing antenna is a modified egg-shaped printed monopole antenna. It has a partial ground of dimensions 32mm x 7mm. A tapered stripline is feeding the antenna for better impedance match over the entire bandwidth of interest. This antenna is able to scan the spectrum from 2 to 10 GHz. The computed antenna radiation patterns at f=3 GHz, 6 GHz and 9 GHz in the X-Z plane are shown in Fig.3. The antenna possesses an omni-directional radiation pattern and is able to radiate above and below the substrate due to the fact that it has a partial ground.

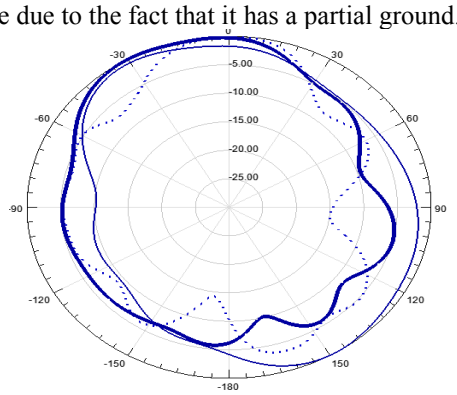

Fig. 3. UWB Antenna Radiation Pattern at f=3 GHz (thin line), 6 GHz (thick line), and 9 GHz (dotted line)

B. Reconfigurable Antenna

The design of reconfigurable antennas requires the inclusion of necessary switching elements. These elements perform the job of connecting different parts of the antenna. This allows the antenna to modify its shape and hence its RF response (return loss/ radiation pattern) will change accordingly.

Previous work on reconfigurable antennas has shown that lumped elements (capacitors/inductors), RF MEMs, PIN diodes or photoconductive switches can perform the switching job. The use of these switching elements (except the photoconductive switches) requires the design of appropriate biasing network for the activation/deactivation purpose [5]. Photoconductive switches usually require a high laser pumped power level to excite enough electrons from the valence band to the conduction in order to make the switch conductive [6].

In this work, a new technique is proposed to produce the required frequency reconfigurable antenna design. The importance of this technique is that no biasing networks are required which lie on the antenna plane and might degrade the antenna performance. Also, there is no need for laser inclusion which might increase the system cost and complexity as is the case of photoconductive switches.

In fact, the required frequency tuning is achieved by physically altering the patch shape. A circular substrate section holding five different antenna patches is rotated via a stepper motor. A 50 Ω stripline overflows the rotating section. At each rotation stage, the stripline excites a different patch and a different frequency is achieved. The rotation mechanism is described briefly in Fig.4. The stepper motor is modeled in HFSS with the antenna structure to account for its effect. The stepper motor's characteristics are extracted from [7].

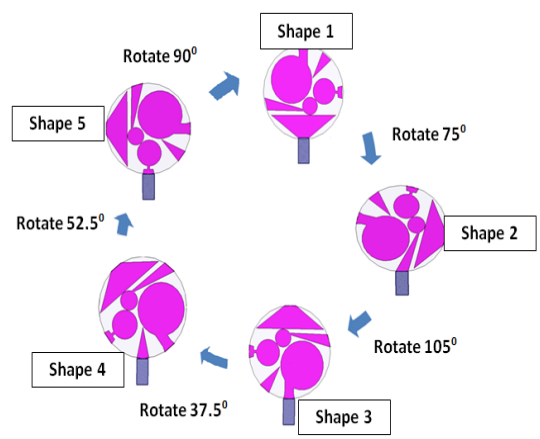

Fig. 4. Antenna reconfigurability process

III. Results And Discussion

A prototype antenna is fabricated and tested. The stepper motor incorporated in the back of the reconfigurable rotating antenna section is connected to a controlling circuit. The fabricated antenna is shown in Fig.5.

A. Sensing Antenna Results

As shown in Fig.2, the sensing antenna has a total length of 38mm ≈ 0.25×λ (where λ corresponds to the lowest frequency at '2 GHz'). The comparison between the simulated and the measured return loss for the sensing antenna is shown in Fig.6. This comparison corresponds to the case when the reconfigurable section is at the initial position shown in Fig.5. It is noted that the UWB performance of the antenna remains constant for all the reconfigurable section positions.

Fig. 5. The fabricated prototype

B. Reconfigurable Antenna Results

The reconfigurable section consists of a rotating 18 mm radius circular substrate section that carries five different patches. Each patch on the rotating section resonates at a different band from 2GHz up to 10 GHz. The five different patches cover collectively the whole band (2- 10 GHz). The dimensions and the position of the different shapes were optimized using HFSS. All the shapes are fed via a 10mm × 5mm feeding line and they share a 20 mm × 10mm partial ground. The comparison between the simulated and the measured return loss for the rotating section is shown in Fig.7. Each band is labeled by the corresponding shape number. An agreement is noticed between both data.

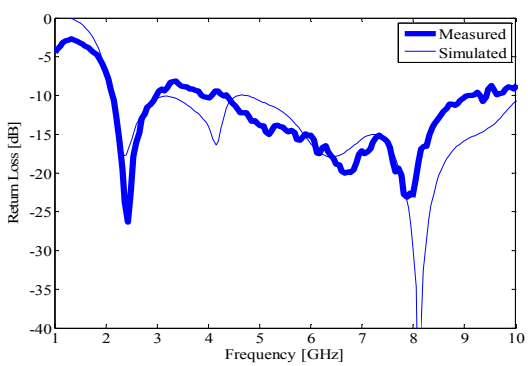

Fig. 6. The return loss for the sensing antenna

C. Coupling between the two antenna sections

For any cognitive radio application the sensing and the reconfigurable antennas must be isolated. In order to quantify the amount of mutual-coupling induced between the two antenna sections, we should look at the transmission between the two antenna ports. A coupling of less than -20 dB is obtained due to the fact that the two antenna structures are fed from the opposite edges of the substrate. The min/max values of the measured coupling for the different positions of the reconfigurable antenna are summarized in Table I.

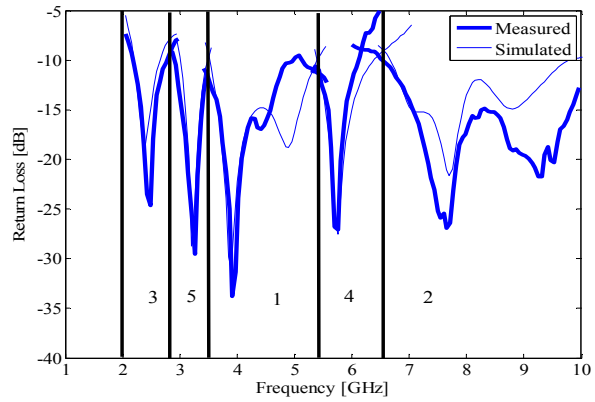

Fig. 7. A comparison between the measured and simulated return loss for the reconfigurable antenna section

TABLE I
Measured Coupling

	Min/Max[dB]
Shape 1	-45/-25
Shape 2	-32/-23
Shape 3	-30/-20
Shape 4	-28/-25
Shape 5	-37/-21

D. Radiation Pattern of the Reconfigurable Antenna

The comparison between the simulated (thick line) and the measured (thin line) radiation pattern for the reconfigurable antenna section in the X-Z plane is shown in Fig.8 for different frequencies. A good agreement is noticed and the antenna preserves its omni-directional radiation pattern for all the different stages of the rotating section making it very convenient for cognitive radio applications

E. Stepper Motor Controller

The stepper motor used in this work is a 4 phase unipolar [7]. It rotates in 7.5 degree steps, and for each step 2 coils should be activated simultaneously. The stepper motor is connected to a computer via a parallel port and the control of the motor is achieved by using LABVIEW. Fig. 9 shows the process of controlling the stepper motor. The ULN 2003 is a high voltage, high current Darlington array. It consists of two pairs of transistors for higher gain. Each output from the Darlington array is connected to one of the four coils of the stepper motor.

IV. Cognitive Radio Experiment

In this section, we demonstrate the applicability of our proposed structure in a cognitive radio environment. The experiment flowchart is shown in Fig.10. It consists of the following steps: The sensing antenna is connected to a spectrum analyzer that measures the power-spectral density of the received signal. The data acquired by the spectrum analyzer is sent to a controlling computer to determine the "spectrum holes". After determining the communication frequency, the controlling computer should decide the corresponding shape that needs to be fed in the reconfigurable antenna structure and the amount of rotation needed. In order to check the operation of the reconfigurable antenna, it is connected to a network analyzer and the data acquired is sent to the controlling computer for analysis.

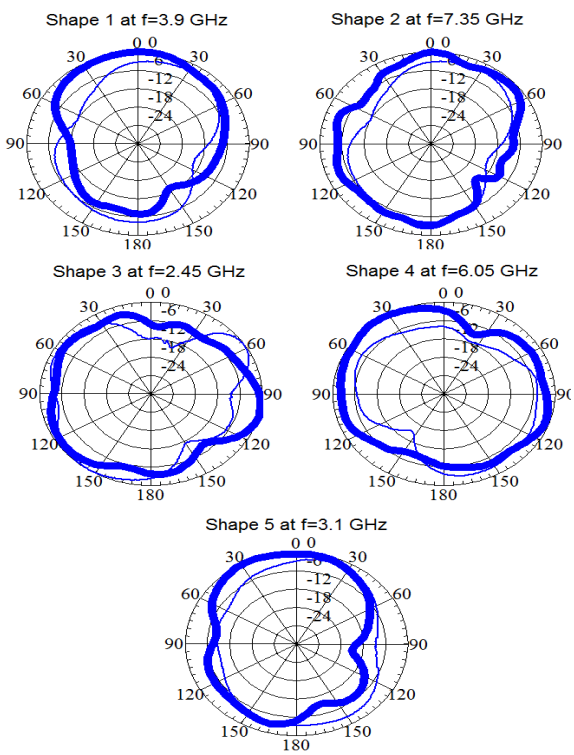

Fig. 8. The simulated (thick line) and the measured (thin line) radiation pattern for the reconfigurable antenna in the XZ plane

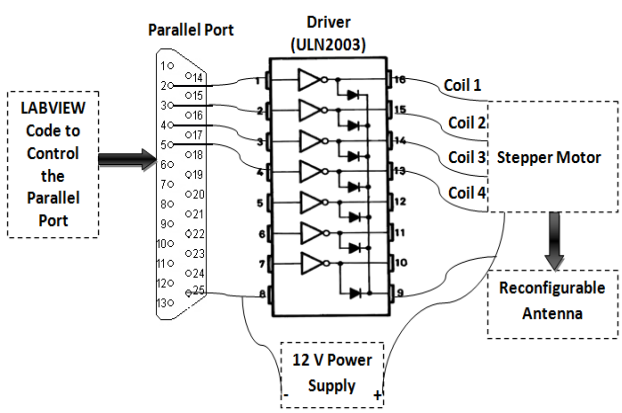

Fig. 9. The stepper motor control setup

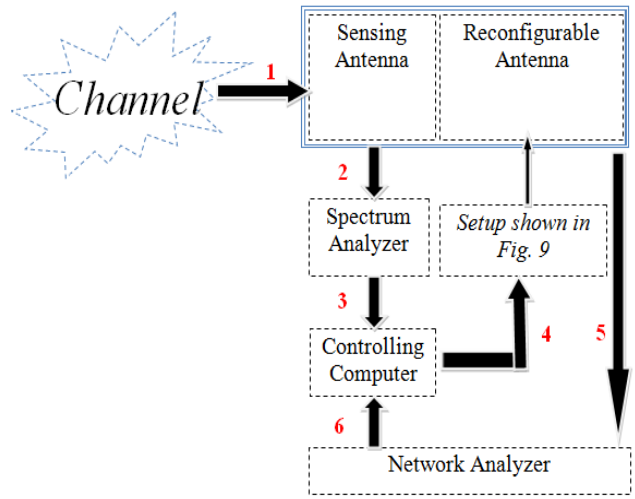

Fig. 10. Cognitive Radio setup

V. Conclusion

This paper presents a new antenna design for cognitive radio applications. The reconfigurability is achieved via a rotational motion of the antenna patch. A prototype was fabricated to prove the proposed technique. For future work, we are looking to control the stepper motor via a microcontroller.

References

[1] K.-L. Yau, P. Komisarczuk, and P. Teal, "A context-aware and intelligent dynamic channel selection scheme for cognitive radio networks," in *4th International Conference on Cognitive Radio Oriented Wireless Networks and Communications,* Hannover, Germany, June 2009, pp. 1 –6.

[2] Y. Tawk, and C. G. Christodoulou, "A new reconfigurable antenna design for cognitive radio", *IEEE Antennas and Wireless Propagation Letters,* vol. 8, pp. 1378-1381, 2009.

[3] G T. Wu, et al., "Switchable quad-band antennas for cognitive radio base station applications," *IEEE Transactions on Antennas and Propagation,* vol. 58, no. 5, pp. 1466-1476, Mar. 2010.

[4] H. F. AbuTarboush, et al. , "Reconfigurable wideband patch antenna for cognitive radio," *in 2009 Loughborough Antennas and Propagation Conference,* Nov. 2009, pp. 141-144.

[5] D. E. Anagnostou, et al., "Design, fabrication, and measurement of an RFMEMS-based self-similar reconfigurable antenna", *IEEE Transactions on Antennas and Propagation,* vol. 54, no. 2, pp. 422-432, Feb. 2006.

[6] Y. Tawk, A. R. Albrecht, S. Hemmady, G. Balakrishnan, and C. G. Christodoulou, "Optically pumped frequency reconfigurable antenna design," *IEEE Antennas and Wireless Propagation Letters,* vol. 9, pp. 280-283, Apr. 2010.

[7] http://www.digikey.com